Part Number：212-1157-P0

Description：12G SDI BNC R/A Bulkhead Jack, PCB Mount Type

Drawing：

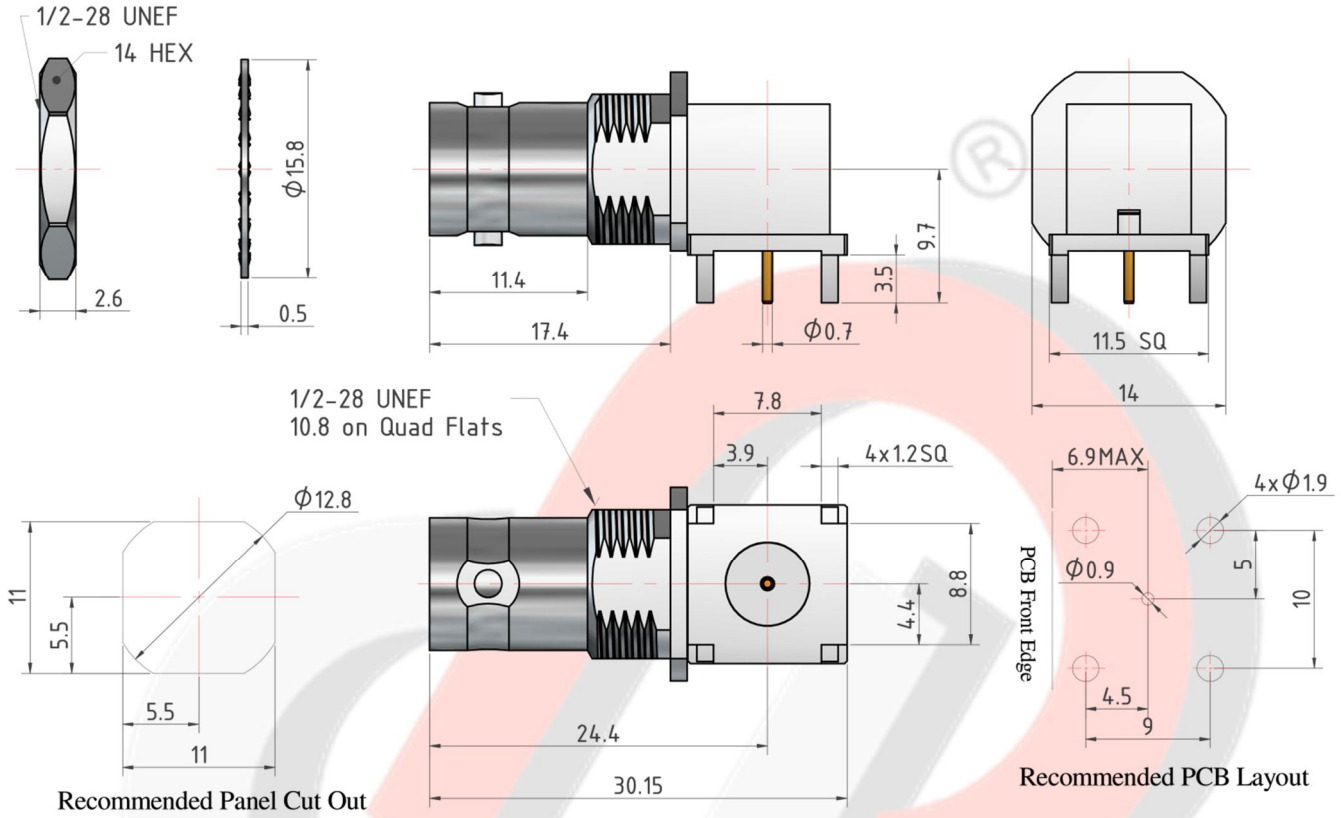

Materials and Finishes

Body	Brass	Nickel Plating
Insulator	PTFE	None
Inner Contact	P. Bronze	Gold Plating
Lock Washer	Steel	Nickel Plating
Nut	Brass	Nickel Plating

Technical Data

Electrical Data:

Impedance	75 Ω
Frequency Range	DC to 12 GHz
Voltage Rating	500 V rms. (Depending on Cable)
Insulator Resistance	≧ 5 GΩ
Dielectric Withstanding Voltage	1500 V rms.

Contact Resistance	Inner Contact：≦ 3 mΩ Outer Contact：≦ 2.5 mΩ

Mechanical Data：

Mating	Bayonet Coupling
Engagement Force :	0.6~2.5 lbs

Environmental Data：

Temperature Range	-65 to 165 ℃
Corrosion (Salt Spray)	MIL-STD-202, Method 101, Cond. C
Thermal Shock	MIL-STD-202, Method 107, Cond. B
Mechanical	MIL-STD-202, Method 213, Cond. I
Vibration	MIL-STD-202, Method 204, Cond. D
2011/65/EU (RoHS)	Compliant with Exemption 6(c)
REACH SVHC	Compliant (Based on The Latest SVHC Candidate List)

Misc. Information (Recommended)

Weight	17.38g
Packaging	Single Pack
Location of Manufacture	Taiwan