Part Number：082-2109

Description：1.6/5.6 S/T Jack, PCB Mount Type (75 Ohm)

Drawing：

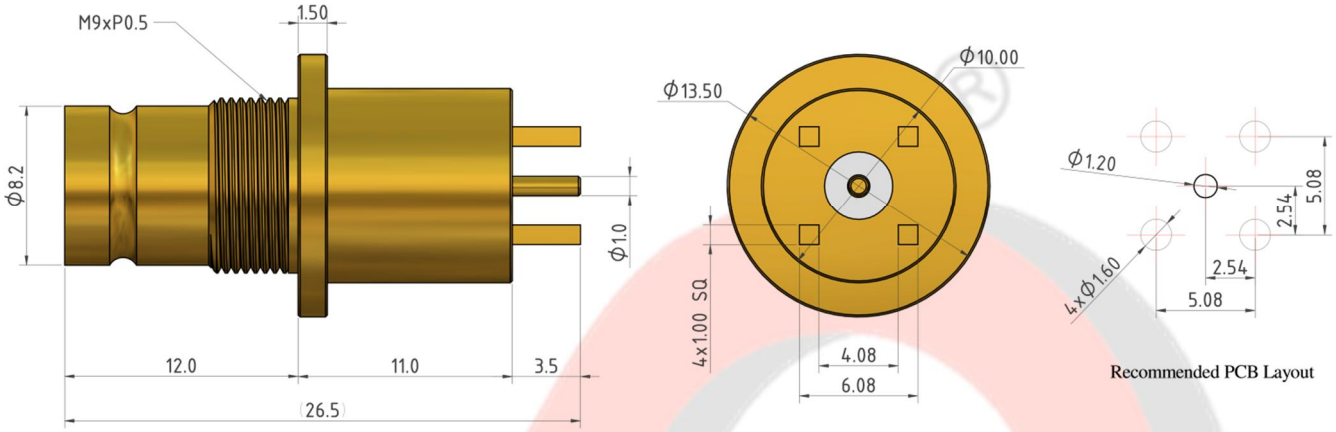

Materials and Finishes

Body	Brass	Nickel Plating
Insulator	PTFE	None
Inner Contact	BeCu	Gold Plating

Technical Data

Electrical Data:

Impedance	75 Ω
Frequency Range	DC to 6 GHz
Voltage Rating	500 V rms. (Depending on Cable)
Insulator Resistance	≧ 5 GΩ
Dielectric Withstanding Voltage	1500 V rms.
Contact Resistance	Inner Contact：≦ 3 mΩ Outer Contact：≦ 2.5 mΩ

Mechanical Data：

Mating	Screw-on / Snap-on / Slide-on / Quick-Lock Coupling.

Environmental Data：

Temperature Range	-65 to 165 ℃
Corrosion (Salt Spray)	MIL-STD-202, Method 101, Cond. B
Thermal Shock	MIL-STD-202, Method 107, Cond. B
Mechanical	MIL-STD-202, Method 213, Cond. I
Vibration	MIL-STD-202, Method 204, Cond. D
2011/65/EU (RoHS)	Compliant with Exemption 6(c)
REACH SVHC	Compliant (Based on The Latest SVHC Candidate List)

Misc. Information (Recommended)

Weight	8.61g
Packaging	Single Pack
Location of Manufacture	Taiwan

Revisions

ISS	Description	DATE
A	Original	2017/07/04